LST-26 TTR

* 26 inches "EloTouch" TFT display with touch screen.
* JCM bill acceptor with all currency stacker.
* High quality in stainless finish and steel cabinet.
* Optional dual screen available.
* High grade speakers and sound quality.
* Optional cabinet finish color.

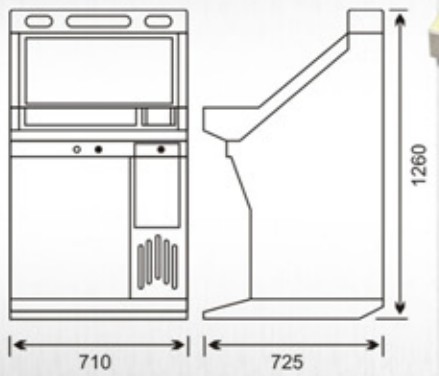

www.libertygaming.net